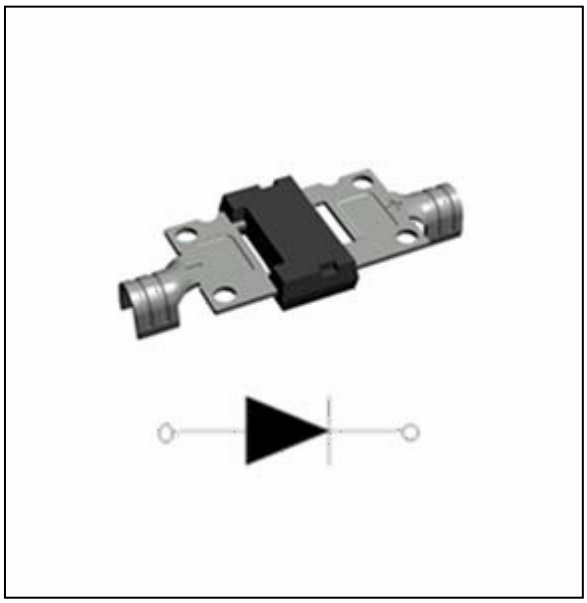

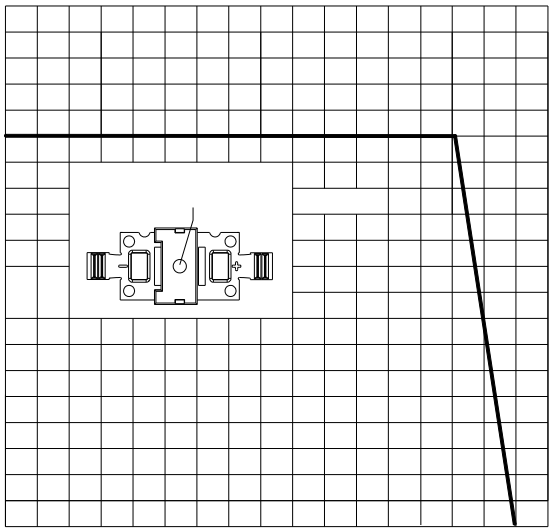

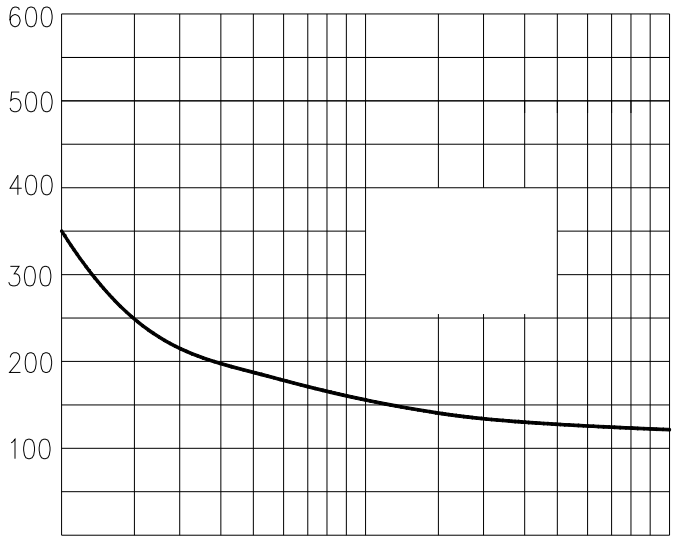
600
500
400
300
200
100

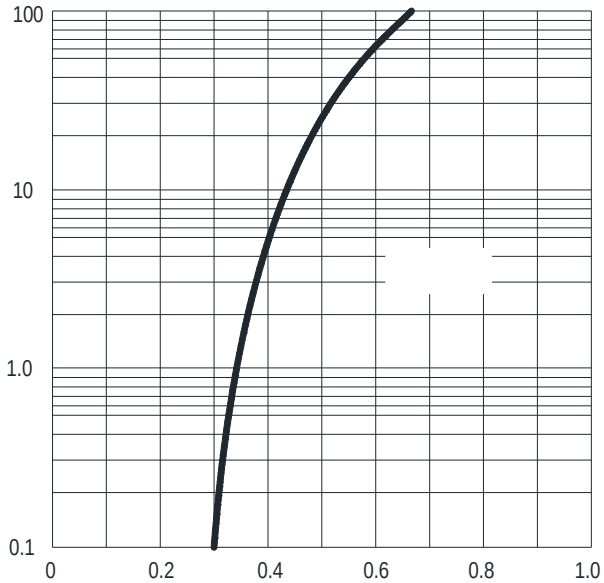
100
10
1.0
0.1
0
0.2
0.4
0.6
0.8
1.0

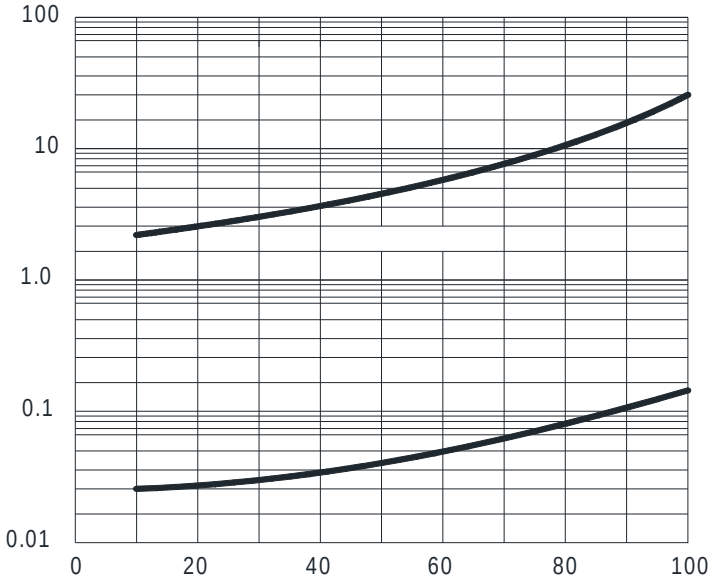
100
10
1.0
0.1
0.01
0
20
40
60
80
100

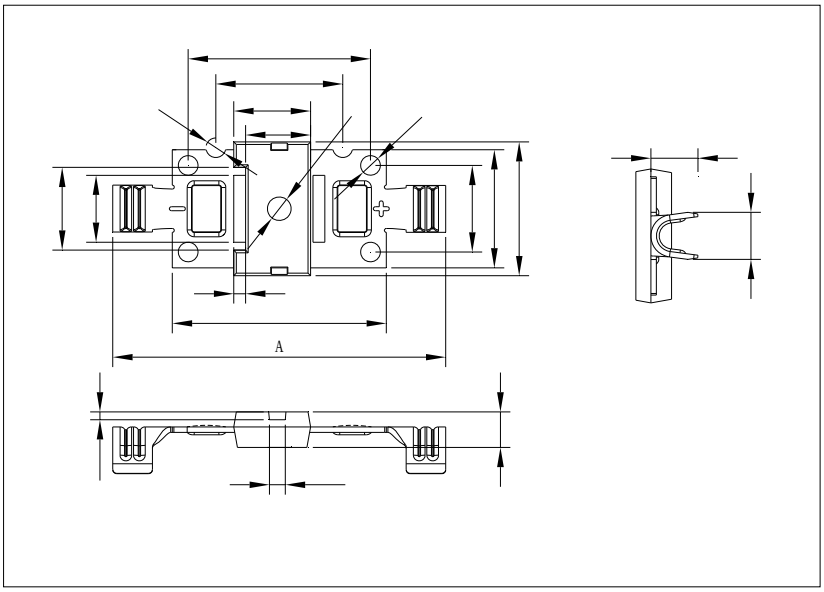
A